FNIRSI 菲尼瑞斯

LC1020E

LCR高精度手持电桥产品说明书V1.1

HIGH-PRECISION HANDHELD LCR METER MANUAL

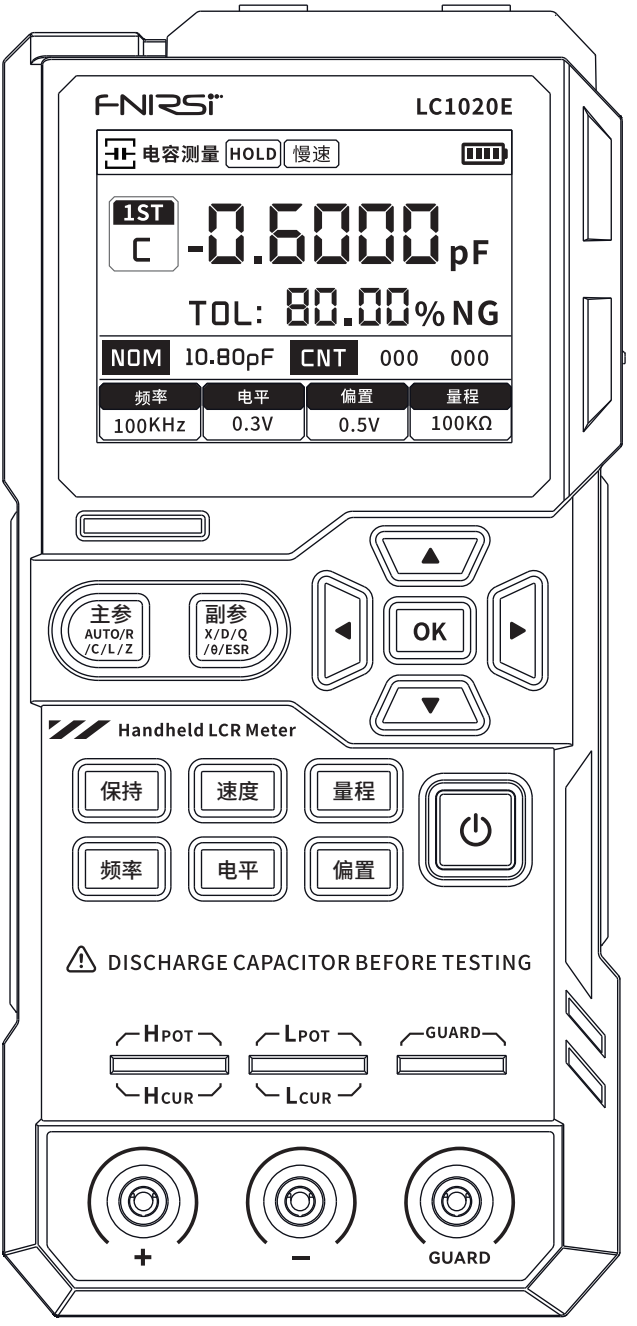

※使用产品前请仔细阅读本说明书，并妥善保管。

※Please read this instruction manual carefully before using the product and keep it properly.

目 录

一、安全 ››› 01

二、安全指南 ››› 01

三、产品简介 ››› 02

四、前面板概览 ››› 03

五、操作指南 ››› 06

六、系统设置指南 ››› 11

七、快速应用指南 ››› 14

八、仪器参数 ››› 17

九、维护保养 ››› 19

十、生产信息 ››› 20

十一、保修说明 ››› 20

保修卡 ››› 页末

CONTENTS

1.SAFETY ››› 21

2.SAFETY GUIDE ››› 21

3.PRODUCT INTRODUCTION ››› 22

4.FRONT PANEL OVERVIEW ››› 23

5.OPERATION GUIDE ››› 27

6.SYSTEM SETUP GUIDE ››› 33

7.QUICK APPLICATION GUIDE ››› 36

8.INSTRUMENT PARAMETERS ››› 40

9.MAINTENANCE ››› 43

10.CONTACT US ››› 44

11.WARRANTY INFORMATION ››› 45

WARRANTY CARD ››› Last Page

一、安全

这些安全措施适用于操作与维护人员，在操作、服务及维修时应注意。

●请勿在易燃易爆环境中使用

避免在多尘、阳光直射、湿度过高、强电磁辐射等恶劣环境中使用。

●非专业维护人员请勿拆开后盖

维护、更换元件或调整仪器应由专业维护人员实行。请联系相关经销商和产品售后服务部门。

●不可随意分解或修改仪器

部分替代及未经授权的修改，可能造成仪器无法恢复性能

●安全警告

涉及安全及人身伤害，或损坏产品，造成测试不良的操作使用或环境条件，在手册里会有相关申明，应严格遵守。

二、安全指南

为让仪器安全使用，请遵循如下指南：

●短时户外使用，应注意防日光直射、防水防潮、防电磁辐射、防尘防爆等防护措施。

●使用前，请阅读并了解本手册中提及的警告和安全信息。

●请按手册规定的功能方法使用仪器。

●如对线路元件测量，请确认测量前电路已关断电源且线路上所有电容和电感已放电。

●测量前，须对电容器，电感器等带电元件进行放电。

●仪器使用3.7V,3000mAh锂电池供电，或使用TypeC接口USB线缆供电,具备充电功能。

三、产品简介

产品简介

LCR高精度手持电桥是一款集高精度、便携性与智能化于一体的电子元件测试工具，专为工程师、技术人员及电子爱好者量身打造，满足实验室、生产线、现场维修等多场景的精密测量需求。

2.8寸高清TFT彩屏，支持L/Q、C/D、R/D等多种参数组合测量，兼容串联/并联等效电路模型。预设阈值快速判定元件良品/不良品，搭配声光提示，大幅提升批量检测效率，助力高效分拣与品控；最高100kHz频率测试，轻松应对电感、电容、电阻等元器件的高频参数分析，覆盖更广泛的应用场景，紧凑机身搭配长效续航电池，摆脱线缆束缚，轻松装入口袋，随时随地开启精准测量。

四、前面板概览

4.1 前面板

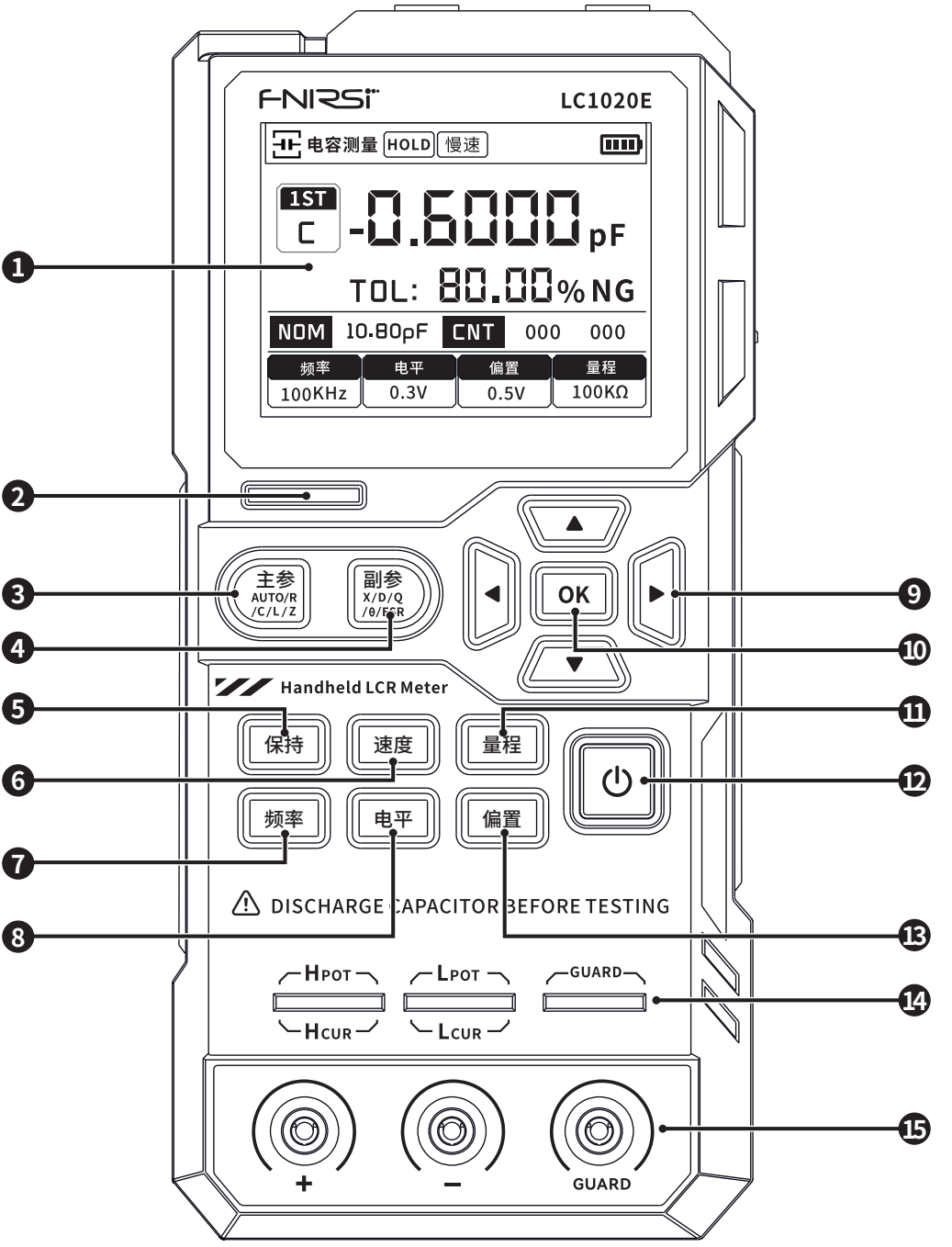

① **显示屏：**2.8英寸TFT液晶显示屏，显示仪器所有的功能。

② **指示灯**

③ **主参数切换键：**快速切换主参数。

④ **副参数切换键：**快速切换副参数。

⑤ **数据保持和记录键：**短按打开、关闭数据保持功能；长按打开、关闭数据记录功能。

⑥ **测量速度切换键：**快速切换需要的测量速度。

⑦ **频率选择键：**快速切换固定点频率。

⑧ **电平选择键：**快速切换固定点电平。

⑨ **方向键：**左右方向键移动光标，上下方向键选择参数。

⑩**OK键：**长按进入、退出系统设置界面，短按确定参数或某一功能的选择。

⑪ **量程切换键：**切换手动量程与自动量程。

⑫ **电源键：**关机状态下长按开机；开机状态下长按则关机。

⑬ **偏置切换键：**快速切换固定点偏置。

⑭ **五端测试插槽**

⑮ **三端测试插孔**

⚠ **注意：**请使用随机附带的适配器，或向我公司购买指定的电源适配器。随意使用其它替代的适配器可能造成不必要的损坏。

4.2 用户界面

▶ 4.2.1 测量界面

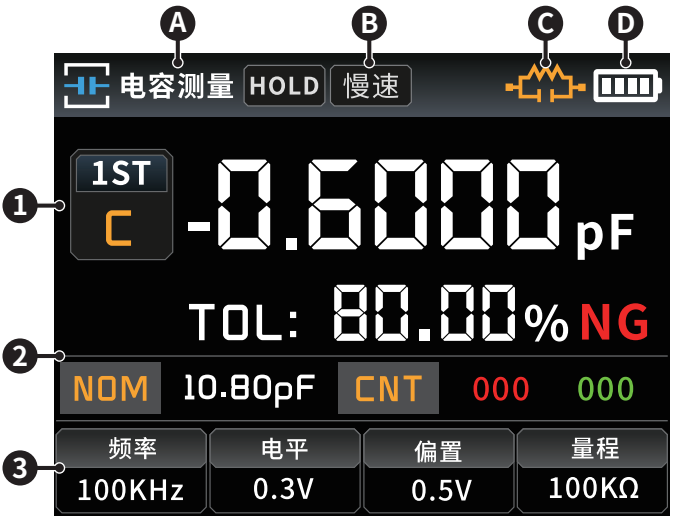

状态栏区域：

A:显示当前选择测量的主参数

B:显示当前选择的量测量速度

C:长按【速度】键显示当前选择的电路连接方式（自动、串联、并联）

D:设备的电池电量剩余提示，提示剩余的电量以便及时给仪器充电

参数区域：

①主参数显示

②副参数显示

③测量参数设置

▶ 4.2.2 系统设置界面

系统设置界面可以进行分选设置调节，同时可以设置产品语言类型、屏幕亮度、声音设置、自动关机、校准设置及系统信息（详细操作可查看“六、系统设置指南”）

4.3 测试端口

LC1020E采用三端和五端测试端口共存的方案，使便捷测试与高精度测试要求兼备，测试端口如图所示：

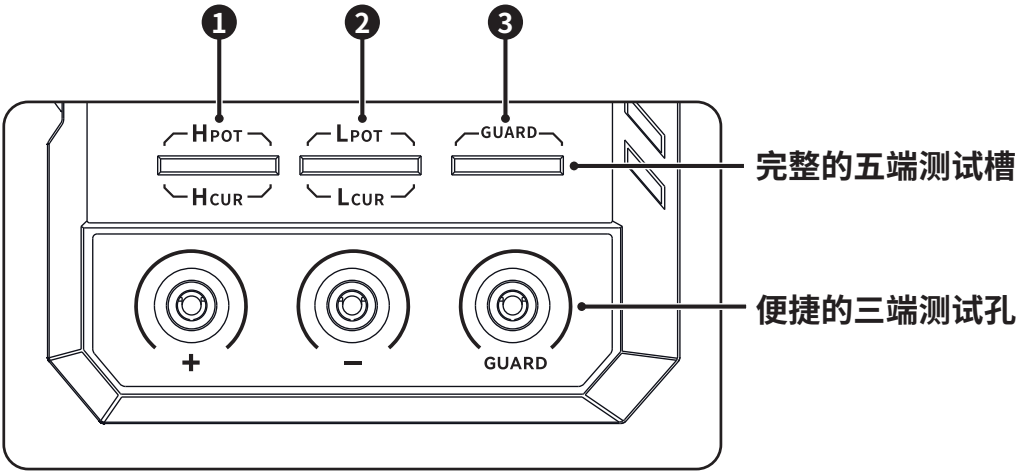

①高端　②低端　③保护端

本仪器的三端式测试口采用标准的橡胶插孔，可以便捷使用廉价的橡胶插头-鳄鱼夹作测试线，扩展测试应用非常方便，但其缺点是测试精度较低。

为提高使用外延测试线时的精度，LC1020E系列同时还配备五端测试槽口，配合专业的测试夹具，可实现完整的外延线四端测量，从而使测试精度得到了保障。

五、操作指南

5.1 开机与关机

长按电源键 ⏻ ，仪器开机，进入测量界面（默认）；开机状态下长按（2秒以上）电源键 ⏻ 关机。

5.2 参数选择

▶ 5.2.1 频率选择

LC1020E系列手持LCR使用交流测试信号施加在被测件(DUT)上进行测量，频率是交流信号源的主要参数之一，由于元件的非理想性和分布参数

的存在，以及测试端和测试线分布参数的影响，同一元件使用不同的测试频率，可能会有不同的测量结果。因此，测量前，应选用合适的频率。

改变测试频率有两种方法:

方法一:直接按【频率】键，可以在预设的频率点之间顺序循环切换，同时光标会自动跳到频率处，频率被选中(背景高亮显示)，如图。

方法二:通过◀ ▶键或直接按【频率】键移动光标到频率处，频率被选中，再按 ▲ ▼ 键在预设的频率点之间顺序循环切换。

可选频率点：100Hz、120Hz、1KHz、10KHz、100KHz

频率选择

▶ 5.2.2 电平选择

LC1020E系列手持LCR使用交流测试信号施加在被测件(DUT)上进行测量，不仅可以改变频率点，也可以改变测试信号大小。

改变测试信号的大小有两种方法:

方法一:直接按【电平】键，可以在预设的电平点之间顺序循环切换，同时光标会自动跳到电平处，电平被选中(背景高亮显示)，如图。

方法二:通过◀ ▶键或直接按【电平】键移动光标到电平处，电平被选中，再按 ▲ ▼ 键在预设的电平点之间顺序循环切换。

可选电平点：0.1V、0.3V、0.6V

电平选择

▶ 5.2.3 内部偏置选择

本手持电桥可以提供内部直流偏置电压。

改变内部偏置电压有两种方法:

方法一:直接按【偏置】键，可以在预设的偏置点之间顺序循环切换，同时光标会自动跳到偏置处，偏置被选中(背景高亮显示)，如图。

方法二:通过◀ ▶键或直接按【偏置】键移动光标到偏置处，偏置被选中，再按 ▲ ▼ 键在预设的偏置点之间顺序循环切换。

可选偏置点:0.0V、0.5V

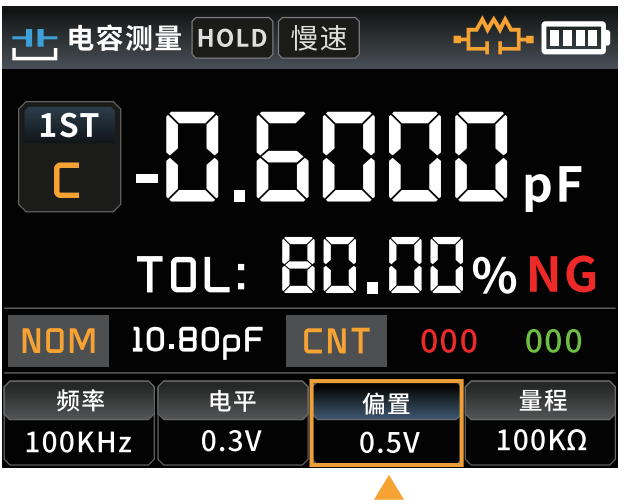

偏置选择

▶ 5.2.4 量程选择

改变内部偏置电压有两种方法:

方法一:直接按【量程】键,可以在预设的量程点之间顺序循环切换,同时光标会自动跳到量程处,量程被选中(背景高亮显示),如图。

方法二:通过◀ ▶键或直接按【量程】键移动光标到量程处,量程被选中,再按 ▲ ▼ 键在预设的量程点之间顺序循环切换。

可选量程点:AUTO、100Ω、1KΩ、10KΩ、100KΩ

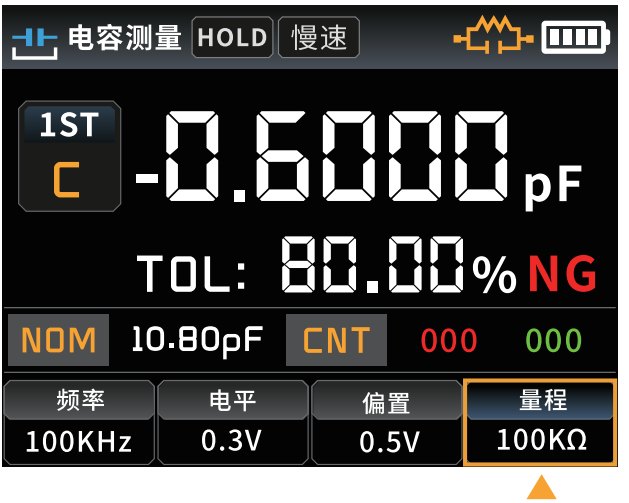

量程选择

▶ 5.2.5 测量速度选择

开机即进入测量显示界面,按【速度】键顺序循环切换测量速度(快速、中速、慢速)。快速(4次/s)、中速(2次/s)、慢速(1次/s)。

▶ 5.2.6 AUTO/R/C/L/Z主参数选择

选择测量参数类型,应首先选择主参数。

按**【主参 AUTO/R/C/L/Z】**键,可顺序切换以下参数:

R(电阻)、C(电容)、L(电感)、Z(阻抗)和AUTO(自动)。当主参数选择AUTO时,功能处显示“自动”。

▶ 5.2.7 X/D/Q/θ/ESR副参数选择

选择测量参数类型，应首先选择主参数。

按【**副参 X/D/Q/θ/ESR**】键可选择以下副参数：

X（电抗）、D（损耗）、Q（品质因素）、θ（相位角）、ESR（串联等效电阻）。

5.3 读数保持模式（HOLD）

数据保持功能用以锁定显示数据，方便读取显示数据。测量仍在进行，但屏幕上显示数据并不随测试更新。

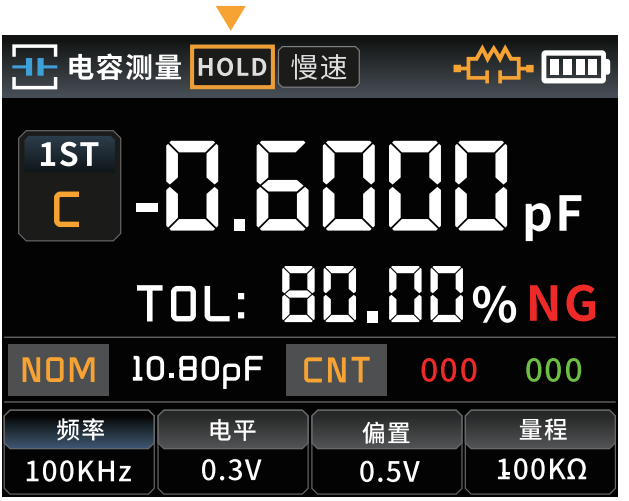

打开读数保持：

要打开读数保持功能，短按【保持】键，屏幕状态栏上显示 **HOLD** 字样图标表明数据保持功能已激活，如图。此时屏幕上主副参数显示为按【保持】键之前的测量结果。

关闭读数保持：

如果关闭读数保持，再次 短按【保持】键，屏幕状态栏上 **HOLD** 字样图标消失，仪器返回正常测量显示模式。

5.4 数据记录功能

数据记录模式下，可以查看被测元件的数据是否符合设定的标称值与容限值，记录测量数据成功与失败的次数。

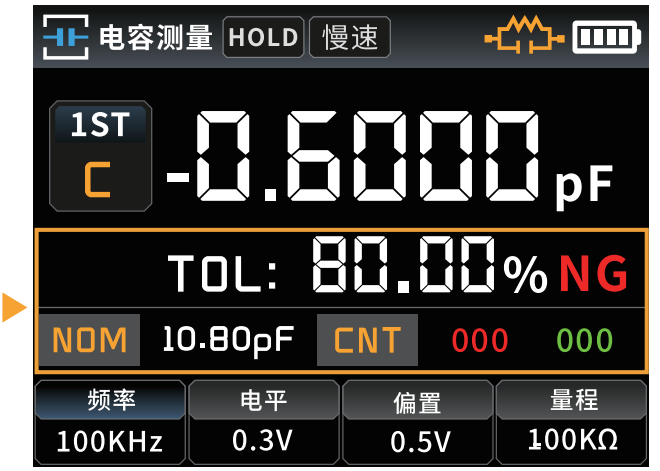

打开记录功能：

长按【保持】键打开数据记录功能，此时屏幕上会显示主参数测量数据及设定的标称值与测量数据成功、失败的状态及次数，如图。

关闭记录功能：

长按【保持】键关闭数据记录功能。

六、系统设置指南

6.1 界面切换

长按电源键 ⏻ 开机进入测量显示界面，再长按 **OK** 键可在测量显示界面与系统设置界面之间进行切换。

6.2 分选设置

分选设置

按 ▲ ▼ 键移动光标到“分选设置”处，再按 **OK** 键进入分选设置，如图。按 ◀ ▶ 键移动光标选择“标称值”、“容限值”、“报警类型”、“报警声音”、“指示灯”，按 **OK** 键进入选择的功能项，可使用方向键进行调节数值参数。长按 **OK** 键返回上级。

6.3 语言设置

按 ▲ ▼ 键移动光标到“语言设置”处，再按 ◀ ▶ 键切换中英文。

6.4 屏幕亮度

按 ▲ ▼ 键移动光标到“屏幕亮度”处，再按 ◀ ▶ 键选择亮度；亮度有10格调节，最亮为10格，最小为1格。

6.5 声音设置

按 ▲ ▼ 键移动光标到“声音设置”处，再按 ◀ ▶ 键选择音量；音量有10格调节，最大为10格，最小为1格。

6.6 自动关机

按 ▲ ▼ 键移动光标到“自动关机”处，再按 ◀ ▶ 键切换自动关机时间；自动关机时间有“不关”、“5分钟”、“15分钟”、“30分钟”可选。

6.7 校准设置

按 ▲ ▼ 键移动光标到“校准设置”处，再按 **OK** 键进入校准设置，按 ◀ ▶ 可选择“开路”、“短路”，按 **OK** 键开始校准。

校准功能分开路和短路两项校正。通过校准可有效降低测试线带来的分布参数误差，短路校准可减少接触电阻和测试线电阻对测量低阻抗元件的影响（适用于低阻抗元件测量）；开路校准可减小测试线间的分布电容和分布电阻对测量高阻抗元件的影响（适用于高阻抗元件测量）；两者都进行校准时，可有效降低上述因素的影响，适用于精密测量。

校准方法如下：

进入校准功能之前，请确保测试两端处于开路（测试夹具断开）或短路（测试夹具接上短路片）状态。按 **OK** 键开始校准，校准状态会显示，校准完成后会显示“完成”字样。如图，校准完成后长按 **OK** 键退出。

⚠ **注意：**校准过程中请勿改变测试两端状态。

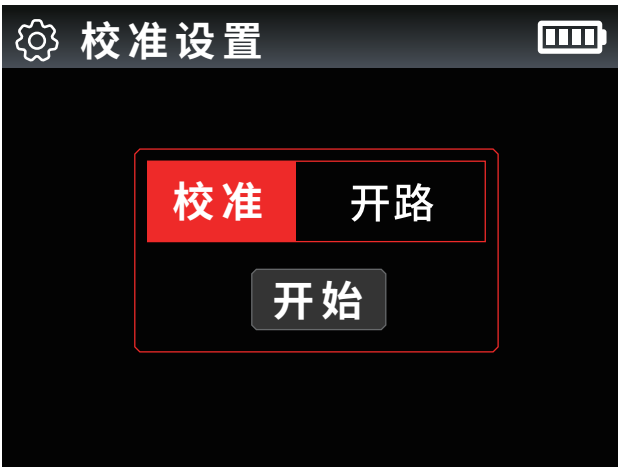

校准设置

6.8 系统信息

按 ▲ ▼ 键移动光标到“系统信息”处，再按 **OK** 键进入系统信息，显示设备如图。按【OK】键选择是否回复出厂设置，如图，长按 **OK** 键返回上一级。

系统信息

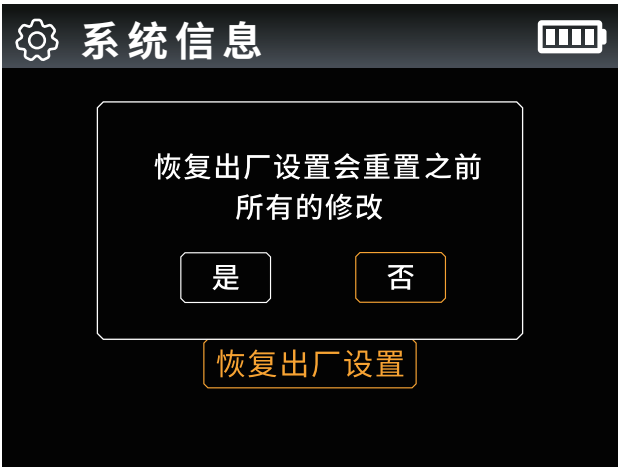

恢复出厂设置

七、快速应用指南

⚠ 警告：

①请勿对带电电容、电感进行测量，测量前需要放电，否则可能造成仪器被损坏。

②如对板载器件在线测量，请先确认是在断电关机状态下，不可对电源电路直接测量。

③在粉尘环境中使用时，仪器易脏，应定期清洁，保护测试端，减小粉尘从测试端进入仪器内。累积的粉尘往往因有一定的导电性而最终影响到仪器的使用。

④请勿将仪器直接置于易爆、阳光直射以及过热环境中。

※**提示：**为达到合适的测量精度，测量前可先参照“校正功能”一节进行开路和短路校正。测试夹具可以用橡胶插头—鳄鱼夹、开尔文测试夹。

7.1 操作建议

●量程选择：

①通常选用自动档即可。

②若对比不同档位下的特性或某些特殊阻抗器件测试不准时，可以手动档调节。

③在器件阻抗不明确时，先选择100欧，然后增加档位，档位越高结果更准。

④若结果突变，则档位过高，退回上一档即可。

●频率建议：

①**电阻：**一般用1K 0.6V即可适用绝大多数情况，个别线绕大电阻，可以降为100Hz测量已减小感量的影响。

②**电容：**一般用1K 0.6V，电解电容用120Hz测试，通用规则是小电容用高频大电容用低频。

③**电感：**一般用1K 0.6V，通用规则是小电感用高频大电感用低频。

●偏置电压：

一般是用于测量电解电容，注意此时电平只能输出0.1和0.3

●输出幅度：

一般都是用0.6vrms，在线测量用0.1v

7.2 给仪器充电

①通过仪器随机附带的电源适配器，Type-C接口USB电缆，连接仪器与电源。

②连接电源后，设备前面板电源键指示灯会亮红，如图:

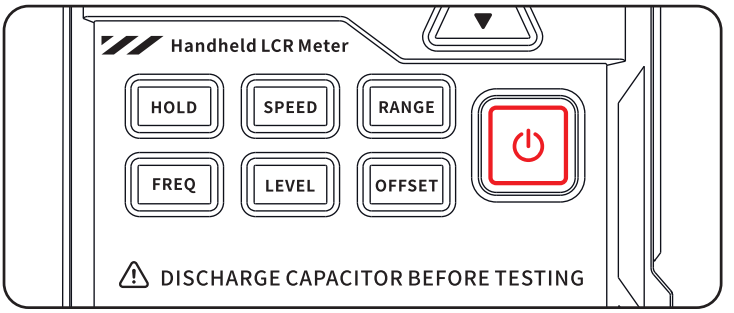

电源充电指示灯

7.3 仪器开机

在电池电量足够或者使用Type-C接口USB电源线供电时，长按电源键仪器开机，此时仪器会显示开机品牌动画，如图:

7.4 器件测量

建议测量前先进行开路和短路校准

①仪器开机进入测试界面后，此时测量参数时系统默认参数（主参数为自动测量，量程为自动测量），将被测器件插入测试槽，或选用合适的测试附件（橡胶插头—鳄鱼夹、开尔文测试夹等）接入被测器件，仪器会自动识别被测元件并给出对应测量结果。

②从屏幕上读取测量结果。

7.5 固件升级

①**进入刷机模式：**在关机状态下，先按住 ▲ 方向键，然后再按 ⏻ 电源键，当屏幕上出现“Bootloader”的文字时，说明已进入刷机模式。

②**连接电脑：**进入刷机模式后，接入A - C 数据线，此时电脑会识别出一个盘符。

③**拷贝文件：**打开从官网下载的固件压缩包，将其中的.bin 后缀固件文件拖放到盘符中，即可自动完成升级。升级速度较快，可观察电桥屏幕查看升级进度。

④升级完成后，长按 ⏻ 电源键进行设备重启，即固件升级完成。

八、仪器参数

以下为LC1020E手持LCR的通用指标和测量精度指标，适用于LC1020E。

8.1 通用参数

型号	LC1020E
测试频率	100Hz、120Hz、1KHz、10KHz、100KHz
基本准确度	0.3%
显示屏	2.8 寸 TFT 液晶显示屏
显示位数	主参数：4 位半，副参数：4 位半
测量参数	主参数：AUTO/R/C/L/Z，副参数：X/D/Q/θ/ESR
测量范围	L: 0-100H　　C: 0-100mF　　R: 0-10M
内部偏置	0.0V、0.5V
测试电平	0.1V、0.3V、0.6V
校准功能	开路校准、短路校准
比较功能	用于计算元件测量值与标称值之间的相对误差，用百分比显示，并给出筛选结果，标称值与容限可设置，容限范围可设定 0.1%-99.9%
记录功能	查看被测元件的数据是否符合设定的标称值与容限值，记录测量数据成功与失败的次数
测试端配置	三端，五端
输出阻抗	100Ω
通讯接口	USB-TypeC（虚拟串口）
其它	语言设置、屏幕亮度、声音设置、自动关机、校准设置、系统信息

8.2 测量精度

⚠ 注意事项：

①环境温度需保持在 20°C±2°C，湿度需≤80% R.H；

②测试前仪器要预热至少 30 分钟；

③需在仪器端面测试槽口进行测试；

④测试前最好进行开路和短路校正。

电容C

量程	100Hz	1KHz	10KHz	100KHz
1mF-100mF	5%±5字	3%±5字		
1uF-1mF	1%±4字	0.5%±5字	2%±5字	3%±4字
1nF-1uF		0.3%±2字	0.4%±2字	1%±4字
1pF-1nF		1%±2字	1.5%±2字	2%±4字

电感 L

量程	100Hz	1KHz	10KHz	100KHz
1H-100H	2%±5字	2%±5字		
1mH-1H	0.4%±5字	0.3%±2字	0.4%±3字	2.5%±5字
10uH-1mH	3%±5字	0.5%±4字	0.5%±3字	1.5%±5字
1uH-10uH		2%±5字	2%±5字	4%±5字

电阻 R

量程	100Hz	1KHz	10KHz	100KHz
1MΩ-10MΩ	5%±4字	3%±3字		
1KΩ-1MΩ	0.4%±4字	0.2%±2字	0.3%±3字	0.6%±5字
1Ω-1KΩ	1.5%±4字	0.3%±2字	0.3%±3字	0.6%±5字
10mΩ-1Ω	4%±4字	2%±5字	2%±5字	5%±5字

九、维护保养

⚠ 警告：

①不可以随意自行维修仪器，应有专业人员维护以及维修仪器。

②谨防液体进入仪器内；谨防遗留杂物特别是导电物在仪器内。

9.1 检修

①如果仪器出现故障不能开机，应首先检查电池及外部电源，电源插孔等，检查按键是否失效；

②如果测试结果异常，首先检查测试附件是否良好，测试槽口内簧片是否受损，同时详阅本说明书，确认操作使用是否有误；

③不可随意更换元器件及特定部件，无法确认的维修请联系相关经销商或我司售后服务。

9.2 清洁

①清洁前，必须关机，移去外接电源和电池。

②防止水或其它液体从测试槽口、按键以及其它接缝处进入仪器，如有不慎，应立即停止使用，并移去电源和电池。

③请用柔软的洁净布蘸中性稀释的洗涤剂小心擦拭脏污部分，防止表面划伤。清洁后，应在完全干燥后再继续使用。

十、生产信息

产品名称：LCR高精度手持电桥

品牌/型号：LC1020E

生产商：深圳市菲尼瑞斯科技有限公司

地址：广东省深圳市龙华区大浪街道伟华达工业园C栋西侧8楼

服务热线：0755-28020752

服务邮箱：support@fnirsi.com

商务邮箱：business@fnirsi.com

官方网站：www.fnirsi.cn

执行标准：GB/T 11151-1989

十一、保修说明

※此页为保修卡基本凭证，请妥善保管

感谢您选择本公司产品，本产品自销售之日起计保修期。在产品保修期内，凡按照产品使用说明书安装使用于正常环境、条件使用之下，因原物料及加工过程中之瑕疵而导致故障，可依据本保修条款的内容享受无偿维修服务，本保修卡请用户妥善保存，以作保修凭证，丢失恕不补发。

以下情况将实施有偿维修服务：

- ●不能出示有效保修卡原件；
- ●产品安装不符合产品要求、标准和相关规范造成的损坏；
- ●产品安装环境中相关配件不符合产品要求、标准和相关规范造成的损坏；
- ●用户对产品使用不当、保管不妥或擅自拆机、私自维修等原因造成的损坏；
- ●超过保修期。

1. SAFETY

These safety measures apply to operators and maintenance personnel. Pay attention to these precautions during operation, service, and maintenance.

●Do not use in flammable or explosive environments

Avoid using in harsh environments such as dusty areas, direct sunlight, high humidity, and strong electromagnetic radiation.

●Do not open the rear cover if you are not a professional technician

Maintenance, component replacement, or instrument adjustments should be performed by professional technicians. Please contact relevant distributors or the product's after-sales service department.

●Do not disassemble or modify the instrument arbitrarily

Some unauthorized replacements and modifications may result in the instrument's performance being permanently compromised.

●Safety Warning

For operations that involve safety or personal injury risks, or actions that could damage the product and lead to poor test results, relevant statements will be provided in the manual. Strict adherence to these guidelines is required.

2.SAFETY GUIDE

To ensure the safe use of the instrument, please follow these guidelines:

●For short outdoor use, take precautions against direct sunlight, water, moisture, electromagnetic radiation, dust, and explosion risks.

●Before use, read and understand the warnings and safety information mentioned in this manual.

●Use the instrument according to the methods specified in the manual.

●If measuring circuit components, ensure the power is turned off and all capacitors and inductors are discharged before measurement.

●Before measuring, discharge components like capacitors and inductors that may be charged.

●The instrument is powered by a 3.7V, 3000mAh lithium battery or via a Type-C USB cable, with charging functionality.

3.PRODUCT INTRODUCTION

Product Introduction

The High-Precision Handheld LCR Meter is an electronic component testing tool that integrates high precision, portability, and intelligence. It is designed for engineers, technicians, and electronics enthusiasts, meeting the precision measurement needs in various scenarios such as laboratories, production lines, and on-site maintenance.

Featuring a 2.8-inch high-definition TFT color display, it supports multiple parameter combinations such as L/Q, C/D, R/D measurements, and is compatible with series/parallel equivalent circuit models. The preset threshold values allow for quick determination of good/bad components, with audio and visual prompts to significantly enhance batch testing efficiency, facilitating efficient sorting and quality control.

With a maximum testing frequency of 100 kHz, it can easily handle high-frequency parameter analysis of components such as inductors, capacitors, and resistors, covering a broader range of applications. The compact body, combined with a long-lasting battery, eliminates the need for cables, making it easy to carry in your pocket and enabling precise measurements anytime and anywhere.

4.FRONT PANEL OVERVIEW

4.1 Front Panel

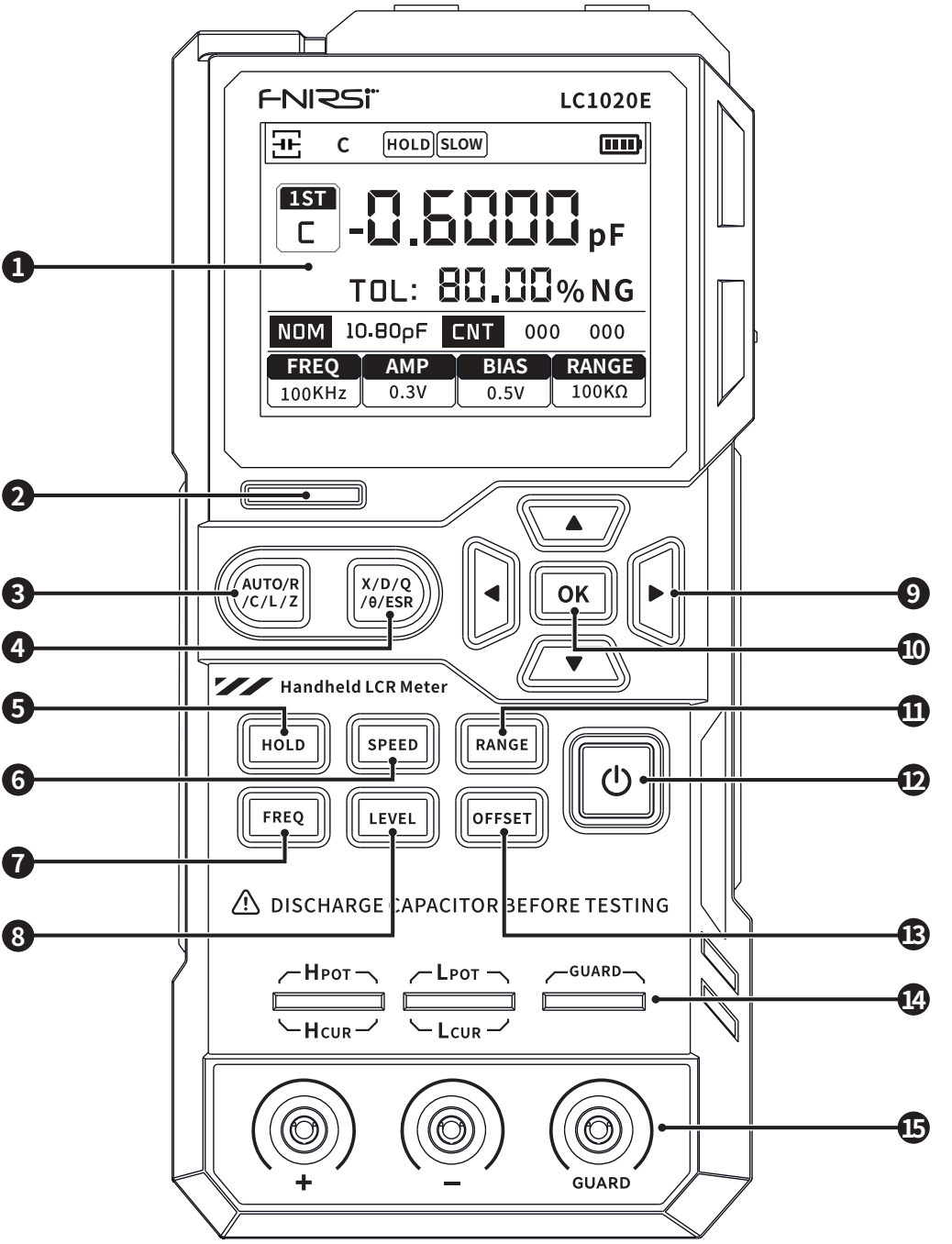

①**Display Screen:** 2.8-inch TFT LCD display showing all the functions of the instrument.

②**Indicator Light**

③**Main Parameter Switch Key:** Quickly switch the main parameters.

④**Secondary Parameter Switch Key:** Quickly switch the secondary parameters.

⑤**Data Hold and Record Key:** Short press to toggle the data hold function on/off; long press to toggle the data recording function on/off.

⑥**Measurement Speed Switch Key:** Quickly switch the required measurement speed.

⑦**Frequency Selection Key:** Quickly switch to a fixed frequency point.

⑧**Level Selection Key:** Quickly switch to a fixed level point.

⑨**Directional Keys:** Left and right keys to move the cursor, up and down keys to select parameters.

⑩**OK Key:** Long press to enter or exit the system settings menu; short press to confirm the selection of parameters or a function.

⑪**Range Switch Key:** Switch between manual range and auto range.

⑫**Power Key:** Long press to power on when the instrument is off; long press to power off when the instrument is on.

⑬**Offset Switch Key:** Quickly switch to a fixed offset point.

⑭**Five-Terminal Test Slot**

⑮**Three-Terminal Test Socket**

⚠ **Note:** Please use the included adapter or purchase a specified power adapter from our company. Using other replacement adapters may cause unnecessary damage.

4.2 User Interface

▶ 4.2.1 Measurement Interface

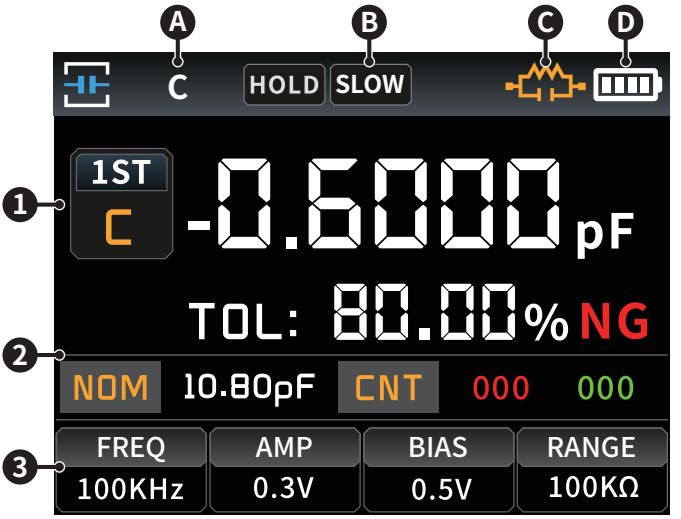

Status Bar Area:

A: Displays the main parameter currently selected for measurement

B: Displays the current measurement speed selected

C: Long press the【SPEED】key to display the current circuit connection method (Auto, Series, Parallel)

D: Battery level indicator, showing the remaining battery power to remind users to charge the device in time

Parameter Area:

① Main parameter display

② Secondary parameter display

③ Measurement parameter settings

▶ 4.2.2 System Settings Interface

The System Settings interface allows for sorting and adjustment settings, as well as setting the product language , screen brightness, sound settings, auto power-off, calibration settings, and system information (for detailed operations, refer to "Section 6: System Settings Guide").

4.3 Test Ports

The LC1020E adopts a solution that integrates both three-terminal and five-terminal test ports, meeting the requirements for both convenient testing and high-precision measurements. The test ports are shown below:

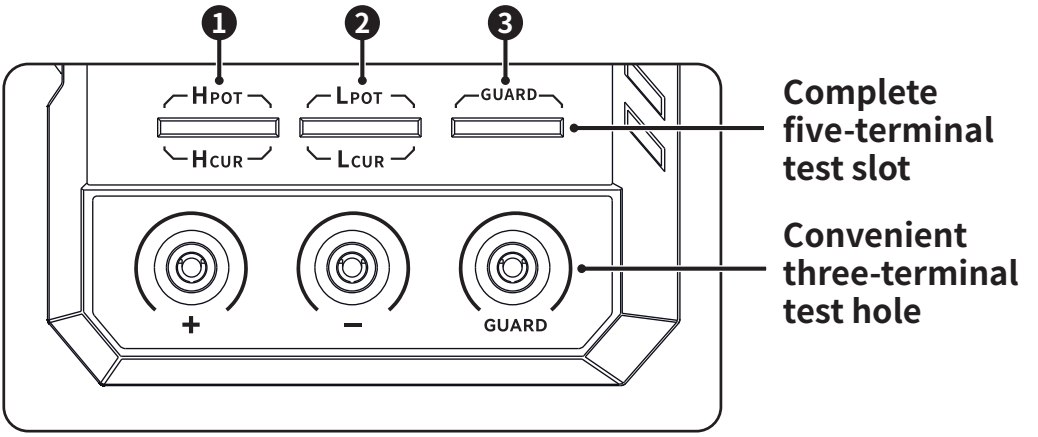

①High terminal ②Low terminal ③Protection terminal

The three-terminal test port of this instrument uses standard rubber sockets, making it convenient to use inexpensive rubber plugs, such as alligator clips, for test leads. This is easy for expanding testing applications, but its downside is lower testing accuracy.

To improve the accuracy when using external test leads, the LC1020E series is also equipped with a five-terminal test slot. With professional test fixtures, it allows for complete four-terminal measurement using external leads, thereby ensuring higher testing accuracy.

5.OPERATION GUIDE

5.1 Power On and Off

Long press the power button ⏻ to turn on the device, and it will enter the measurement interface (default). To power off, long press the power button ⏻ for more than 2 seconds while the device is on.

5.2 Parameter Selection

▶ 5.2.1 Frequency Selection

The LC1020E series handheld LCR meter applies an AC test signal to the component under test (DUT) for measurement. Frequency is one of the main parameters of the AC signal source. Due to the non-ideal nature of components and the presence of parasitic elements, as well as the effects of test ports and test lead parasitics, the same component may show different measurement results when tested at different frequencies. Therefore, before measurement, it is important to choose an appropriate frequency.

There are two methods to change the test frequency:

Method 1: Press **FREQ** button to cycle through the preset frequency points in order. The cursor will automatically move to the frequency setting, and the selected frequency will be highlighted

(background highlighted), as shown in the figure.

Method 2: Use ◀ ▶ buttons or press **FREQ** button to move the cursor to the frequency setting, select the frequency, and then press ▲ ▼ buttons to cycle through the preset frequency points in order.

Selectable frequency points: 100Hz, 120Hz, 1KHz, 10KHz, 100KHz

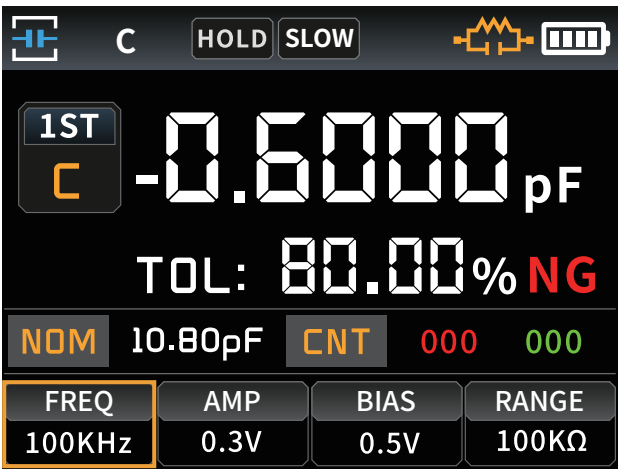

Frequency Selection

▶ 5.2.2 Level Selection

The LC1020E series handheld LCR meter applies an AC test signal to the component under test (DUT). Not only can the frequency point be changed, but the test signal level can also be adjusted.

There are two methods to change the test signal level:

Method 1: Press the **LEVEL** button to cycle through the preset level points in order. The cursor will automatically move to the level setting, and the selected level will be highlighted (background highlighted), as shown in the figure.

Method 2: Use ◀ ▶ buttons or press **LEVEL** button to move the cursor to the level setting, select the level, and then press ▲ ▼ buttons to cycle through the preset level points in order.

Selectable level points: 0.1V, 0.3V, 0.6V

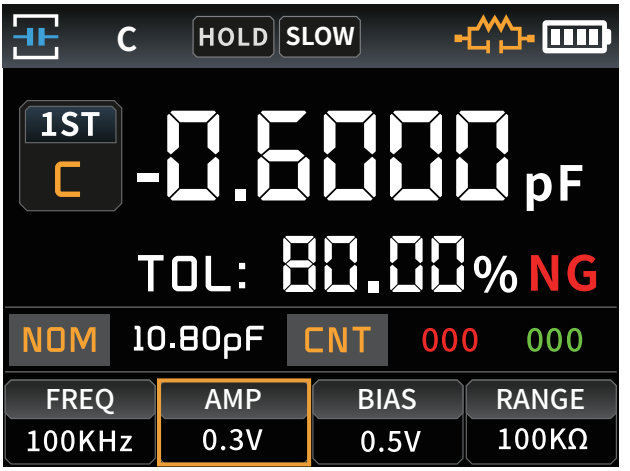

Level Selection

▶ 5.2.3 Internal Bias Selection

This handheld LCR meter can provide an internal DC bias voltage.

There are two methods to change the internal bias voltage:

Method 1: Press **OFFSET** button to cycle through the preset bias points in order. The cursor will automatically move to the bias setting, and the selected bias will be highlighted (background highlighted), as shown in the figure.

Method 2: Use ◀ ▶ buttons or press **OFFSET** button to move the cursor to the bias setting, select the bias, and then press ▲ ▼ buttons to cycle through the preset bias points in order.

Selectable bias points: 0.0V, 0.5V

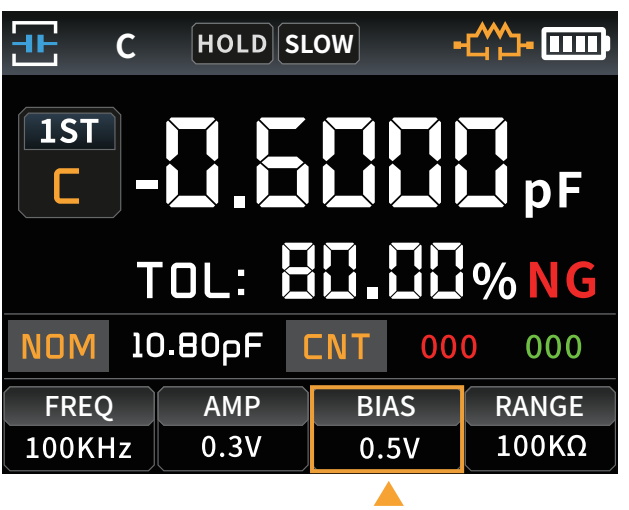

Internal Bias Selection

▶ 5.2.4 Range Selection

There are two methods to change the range:

Method 1: Press **RANGE** button to cycle through the preset range points in order. The cursor will automatically move to the range setting, and the selected range will be highlighted (background highlighted), as shown in the figure.

Method 2: Use ◀ ▶ buttons or press **RANGE** button to move the cursor to the range setting, select the range, and then press ▲ ▼ buttons again to cycle through the preset range points in order.

Selectable range points: AUTO, 100Ω, 1KΩ, 10KΩ, 100KΩ

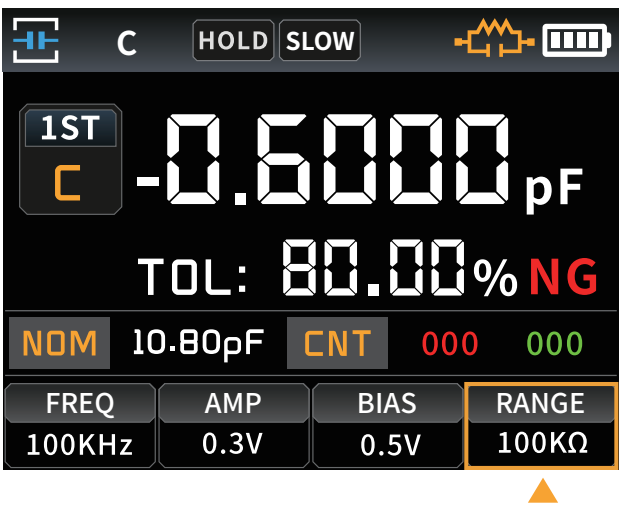

Range Selection

▶ 5.2.5 Measurement Speed Selection

Upon powering on, the device enters the measurement display interface. Press **SPEED** button to cycle through the measurement speeds in order: Fast (4 times/s), Medium (2 times/s), Slow (1 time/s)

▶ 5.2.6 AUTO/R/C/L/Z Main Parameter Selection

To select the measurement parameter type, you should first choose the main parameter.

Press **AUTO/R/C/L/Z** button to cycle through the following parameters in order: R (Resistance), C (Capacitance), L (Inductance), Z (Impedance), and AUTO (Automatic). When the main parameter is set to AUTO, the display will show "Automatic".

▶ 5.2.7 X/D/Q/θ/ESR Secondary Parameter Selection

To select the measurement parameter type, you should first choose the main parameter.

Press the **X/D/Q/θ/ESR** button to choose the following secondary parameters:X(Reactance),D (Dissipation Factor),Q (Quality Factor),θ (Phase Angle),ESR (Equivalent Series Resistance)

5.3 Hold Mode (HOLD)

The data hold function is used to lock the displayed data, making it easier to read. Measurement continues, but the data on the screen does not update during testing.

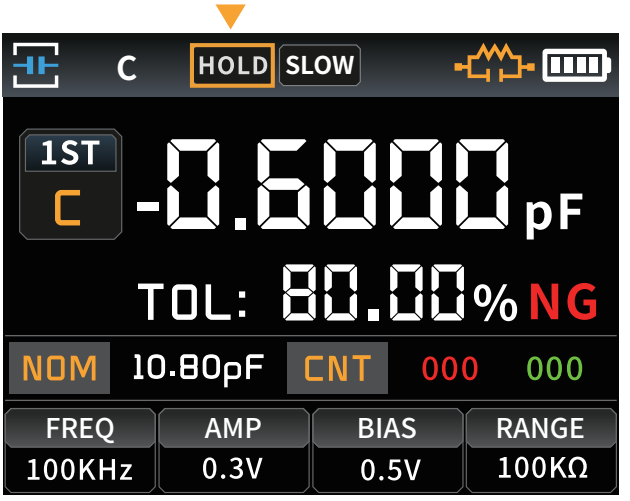

Turning on Data Hold:

To activate the data hold function, press **HOLD** button briefly. The status bar on the screen will display the **HOLD** icon, indicating that the data hold function is active, as shown in the figure. At this time, the main and secondary parameters on the screen will show the measurement results prior to pressing **HOLD** button.

Turning off Data Hold:

To deactivate data hold, press **HOLD** button again briefly. The **HOLD** icon in the status bar will disappear, and the device will return to normal measurement display mode.

5.4 Data Logging Function

In data logging mode, you can check if the measured component's data meets the set nominal values and tolerance limits, and record the number of successful and failed measurements.

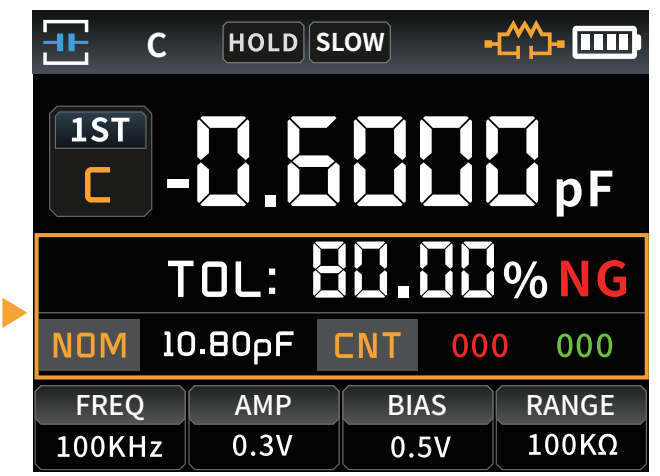

Turning on the Data Logging Function:

To activate the data logging function, long press the **HOLD** button. The screen will display the main parameter measurement data, along with the set nominal values and the status and counts of successful and failed measurements, as shown in the figure.

Turning off the Data Logging Function:

Long press **HOLD** to deactivate the data logging function.

6.SYSTEM SETTINGS GUIDE

6.1 Interface Switching

Long press the power button ⏻ to turn on the device and enter the measurement display interface. Then Long press **OK** button to switch between the measurement display interface and the system settings interface.

6.2 Sorting Settings

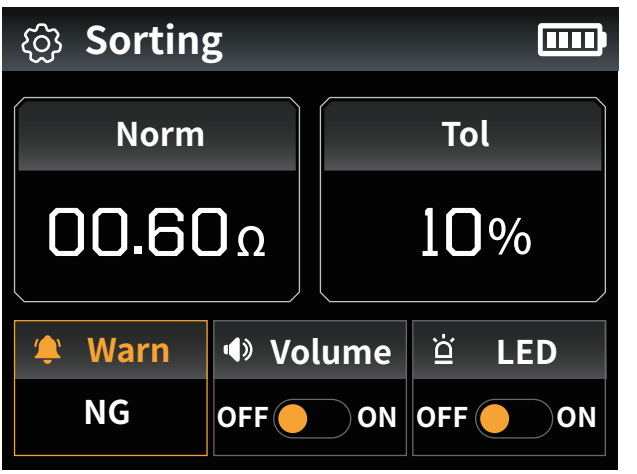

Sorting Settings

Press ▲ ▼ buttons to move the cursor to the "Sorting Settings" option, then press **OK** button to enter the sorting settings, as shown in the figure.

Press ◀ ▶ buttons to move the cursor and select "Nominal Value," "Indicator Light," "Tolerance Value," "Alarm Type," and "Alarm Sound." Press **OK** button to enter the selected function, where you can use the [Arrow] buttons to adjust the value parameters. Long press **OK** button to return to the previous level.

6.3 Language Settings

Press ▲ ▼ buttons to move the cursor to the "Language Settings" option, then press ◀ ▶ buttons to switch between Chinese and English.

6.4 Screen Brightness

Press ▲ ▼ buttons to move the cursor to the "Screen Brightness" option, then press ◀ ▶ buttons to select the brightness level. The brightness has 10 levels, with the brightest being level 10 and the lowest being level 1.

6.5 Sound Settings

Press ▲ ▼ buttons to move the cursor to the "Sound Settings" option, then press ◀ ▶ buttons to select the volume level. The volume has 10 levels, with the maximum being level 10 and the minimum being level 1.

6.6 Auto Power Off

Press ▲ ▼ buttons to move the cursor to the "Auto Power Off" option, then press ◀ ▶ buttons to switch the auto power-off time. The available options for auto power-off time are: "Off," "5 minutes," "15 minutes," and "30 minutes."

6.7 Calibration Settings

Press ▲ ▼ buttons to move the cursor to the "Calibration Settings" option, then press **OK** button to enter the calibration settings. Press ◀ ▶ buttons to select "Open" or "Short" calibration. Press **OK** to start the calibration.

The calibration function includes two types: open-circuit calibration and short-circuit calibration. Calibration effectively reduces the parasitic errors caused by the test leads. Short-circuit calibration helps reduce the effects of contact resistance and lead resistance on low-impedance measurements (suitable for low-impedance component measurements). Open-circuit calibration helps reduce the effects of parasitic capacitance and resistance between the test leads on high-impedance measurements (suitable for high-impedance component measurements).

Performing both calibrations together effectively reduces the impact of these factors, ensuring accurate and precise measurements.

Calibration Method:

Before entering the calibration function, please ensure that the two test ends are either open (test fixtures are disconnected) or shorted (test fixtures are connected to a shorting piece). Press **OK** button to start the calibration, and the calibration status will be displayed. Once the calibration is complete, the word "Complete" will appear, as shown in the figure. After calibration is finished, long press **OK** button to exit.

⚠ **Note:** Do not change the status of the two test ends during the calibration process.

Calibration Settings

6.8 System Information

Use ▲ ▼ buttons to move the cursor to "System Information," then press **OK** button to enter the system information, which will display the device details as shown in the figure. Press the **OK** button to choose whether to restore the factory settings, as shown in the figure. Long press **OK** button to return to the previous level.

System Information

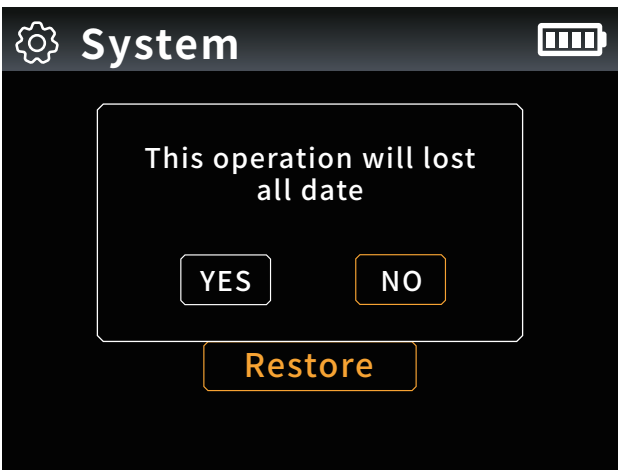

Factory Reset

7.QUICK APPLICATION GUIDE

⚠ Warning:

①Do not measure charged capacitors or inductors; they must be discharged before measurement, or it may cause damage to the instrument.

②If measuring onboard components online, ensure the component is powered off and not directly measuring the power circuit.

③When used in dusty environments, the instrument may become dirty. It should be cleaned regularly to protect the test ports and reduce dust entry. Accumulated dust, due to its conductivity, can affect the instrument's performance over time.

④Do not place the instrument directly in explosive, direct sunlight, or overheated environments.

※**Tip:**To achieve accurate measurements, perform open and short-circuit calibration as described in the "Calibration Function" section before measuring. Test fixtures can use rubber plug crocodile clips or Kelvin test clips.

7.1 Operation Recommendations

●Range Selection:

①Usually, the auto range is sufficient.

②For comparing characteristics at different ranges or if specific impedance components are not measured accurately, you can manually adjust the range.

③When the impedance of the device is uncertain, start with the 100 Ω range and then increase the range. Higher ranges give more accurate results.

④If the results suddenly change, the range is too high, so switch to the previous range.

●Frequency Recommendations:

①**Resistance:** Use 1kHz, 0.6V for most cases. For large wound resistors, use 100Hz to reduce inductive effects.

②**Capacitance:** Use 1kHz, 0.6V, and for electrolytic capacitors, use 120Hz. A general rule is to use high frequencies for small capacitors and low frequencies for large capacitors.

③**Inductance:** Use 1kHz, 0.6V. The general rule is to use high frequencies for small inductors and low frequencies for large inductors.

●Bias Voltage:

Typically used for measuring electrolytic capacitors. At this time, the output level can only be 0.1V or 0.3V.

●Output Amplitude:

Typically, 0.6Vrms is used, while for online measurements, 0.1V is used.

7.2 Charging the Instrument

①Connect the instrument to the power source using the included power adapter and Type-C USB cable.

②After connecting to the power source, the power button indicator on the front panel of the device will light up red, as shown in the image：

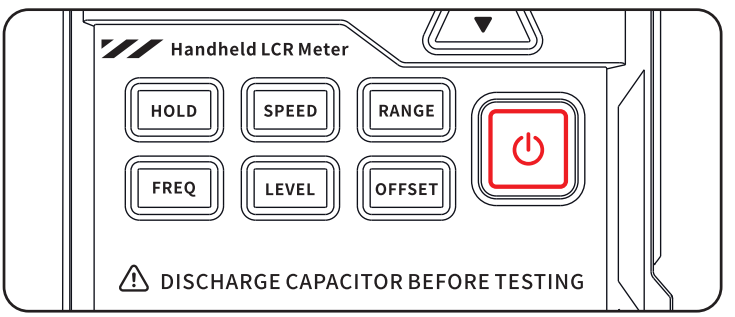

Power Charging Indicator

7.3 Instrument Power On

When the battery has sufficient charge or when powered using a Type-C USB cable, press and hold the power button to turn the instrument on. The instrument will display the brand animation during startup, as shown in the image：

7.4 Component Measurement

It is recommended to perform open and short circuit calibration before measurement.

①After the instrument powers on and enters the test interface, the system's default parameters (main parameter set to automatic measurement, range set to automatic measurement) will be applied. Insert the device under test into the test slot, or use appropriate testing accessories (such as rubber plug-crocodile clips, Kelvin test clips, etc.) to connect the component under test. The instrument will automatically recognize the component and provide the corresponding measurement result.

②Read the measurement result from the screen.

7.5 Firmware Upgrade

①**Enter Bootloader Mode:** In the powered-off state, first press and hold ▲ button, then press ⏻ button. When the screen shows "Bootloader," it means the device has entered firmware upgrade mode.

②**Connect to the Computer:** After entering bootloader mode, connect the device to the computer using a Type-A to Type-C data cable. The computer will recognize a new drive.

③**Copy the File:** Open the firmware ZIP file downloaded from the official website, and drag the .bin firmware file into the drive. The upgrade will begin automatically. The process is quick, and you can monitor the progress on the instrument's screen.

④**Reboot After Upgrade:** Once the upgrade is complete, press and hold ⏻ button to restart the device, completing the firmware upgrade.

8. INSTRUMENT PARAMETERS

The following are the general specifications and measurement accuracy parameters for the LC1020E handheld LCR bridge, applicable to the LC1020E model.

8.1 General Parameters

Model	LC1020E
Test Frequency	100Hz、120Hz、1KHz、10KHz、100KHz
Basic Accuracy	0.3%
Display	2.8-inch TFT LCD display
Display Digits	Main Parameter: 4.5 digits; Secondary Parameter: 4.5 digits
Measurement Parameters	Main Parameters: AUTO/R/C/L/Z; Secondary Parameters: X/D/Q/θ/ESR
Measurement Range	L: 0-100H C: 0-100mF R: 0-10M
Internal Bias	0.0V、0.5V
Test Level	0.1V、0.3V、0.6V
Calibration Functions	Open circuit calibration, Short circuit calibration
Comparison Function	Used to calculate the relative error between the component measurement value and the nominal value, displayed as a percentage, and provides filtering results. Nominal values and tolerance can be set, with tolerance range adjustable from 0.1% to 99.9%
Record Function	Checks if the measured component data meets the set nominal value and tolerance, recording the number of successful and failed measurements

Test Terminal Configuration	Three-terminal, Five-terminal
Output Impedance	100Ω
Communication Interface	USB-TypeC (Virtual serial port)
Others	Language settings, Screen brightness, Sound settings, Auto power-off, Calibration settings, System information

8.2 Measurement Accuracy

⚠ Precautions:

①The ambient temperature should be maintained at 20°C ± 2°C, and the humidity should be ⩽ 80% R.H.

②The instrument should be preheated for at least 30 minutes before testing.

③Testing should be performed at the instrument's test slots on the front panel.

④It is recommended to perform open-circuit and short-circuit calibration before testing.

Capacitance (C)

Range	100Hz	1KHz	10KHz	100KHz
1mF-100mF	5% ± 5 digits	3% ± 5 digits		
1uF-1mF	1% ± 4 digits	0.5% ± 5 digits	2% ± 5 digits	3% ± 4 digits
1nF-1uF		0.3% ± 2 digits	0.4% ± 2 digits	1% ± 4 digits
1pF-1nF		1% ± 2 digits	1.5% ± 2 digits	2% ± 4 digits

Inductance (L)

Range	100Hz	1KHz	10KHz	100KHz
1H-100H	2% ± 5 digits	2% ± 5 digits		
1mH-1H	0.4% ± 5 digits	0.3% ± 2 digits	0.4% ± 3 digits	2.5% ± 5 digits
10uH-1mH	3% ± 5 digits	0.5% ± 4 digits	0.5% ± 3 digits	1.5% ± 5 digits
1uH-10uH		2% ± 5 digits	2% ± 5 digits	4% ± 5 digits

Resistance (R)

Range	100Hz	1KHz	10KHz	100KHz
1MΩ-10MΩ	5% ± 4 digits	3% ± 3 digits		
1KΩ-1MΩ	0.4% ± 4 digits	0.2% ± 2 digits	0.3% ± 3 digits	0.6% ± 5 digits
1Ω-1KΩ	1.5% ± 4 digits	0.3% ± 2 digits	0.3% ± 3 digits	0.6% ± 5 digits
10mΩ-1Ω	4% ± 4 digits	2% ± 5 digits	2% ± 5 digits	5% ± 5 digits

9.MAINTENANCE AND CARE

⚠ Warnings:

①Do not attempt to repair the instrument by yourself. Only qualified professionals should maintain and repair the instrument.

②Be cautious of liquids entering the instrument and ensure that no foreign objects, especially conductive materials, are left inside.

9.1 Troubleshooting

①If the instrument fails to turn on, check the battery, external power supply, and power socket. Also, verify if any buttons are unresponsive.

②If the test results are abnormal, first inspect the test accessories for any issues. Check if the spring contacts inside the testing slot are damaged. Also, carefully review the user manual to ensure that you are using the instrument correctly.

③Do not replace components or specific parts without proper knowledge. For repairs that cannot be identified, please contact the authorized distributor or our after-sales service.

9.2 Cleaning

①Before cleaning, ensure the instrument is turned off, and disconnect both the external power supply and the battery.

②Prevent water or other liquids from entering the instrument through the testing slots, buttons, or seams. If liquid enters the device, immediately stop using it and remove the power and battery.

③Use a soft, clean cloth dampened with diluted neutral detergent to gently wipe any dirt or stains. Avoid scratching the surface. After cleaning, allow the instrument to dry completely before using it again.

10.CONTACT US

Product Name: LCR High-Precision Handheld Bridge
Brand/Model: LC1020E
Manufacturer: Shenzhen Fnirsi Technology Co., Ltd.
Address: 8th Floor, West Side, Building C, Weihua Da Industrial Park, Dalang Street, Longhua District, Shenzhen, Guangdong
Service Hotline: 0755-28020752
Service Email: support@fnirsi.com
Business Email: business@fnirsi.com
Official Website: www.fnirsi.com
Execution Standard: GB/T 11151-1989

http://www.fnirsi.com/

11.WARRANTY INFORMATION

※This page is the basic warranty card. Please keep it.

Thank you for choosing our company's products. The warranty period of this product starts from the date of sale. During the product warranty period, if the product is installed and used in accordance with the product manual and used in normal environment and conditions, and the fault is caused by defects in the original materials and processing, you can enjoy free repair services according to the content of this warranty clause. Please keep this warranty card properly as a warranty certificate. No reissue will be issued if it is lost.

The following situations will incur paid repair services:

- Unable to present the original valid warranty card.
- Damage caused by improper installation not meeting product requirements, standards, or relevant specifications.
- Damage caused by accessories in the installation environment not meeting product requirements, standards, or relevant specifications.
- Damage caused by improper use, improper storage, unauthorized disassembly, or unauthorized repairs by the user.
- Expiration of the warranty period.

保修卡

产品型号	LC1020E	**数量**	
渠道商名称 （购买商店）			
联系方式			
渠道商地址			
发票号 （订单号）			
购买时间	年　　月　　日		

客户姓名:	**地址:**
联系方式:	**故障说明:**

Warranty Card

Product Model	LC1020E	**Qty.**	
Distributor Name (where to buy)			
Contact			
Address			
Invoice Number (Order Number)			
Purchase Date (as per invoice)	**Year**	**Month**	**Day**

User Name:	**Address:**
Contact:	**Fault Description:**

下载用户手册&应用软件

Download User Manual & App & Software