FNIRSI 菲尼瑞斯

LCR-ST1

智能电桥镊子使用说明书 V1.6

INTELLIGENT BRIDGE TWEEZERS USER MANUAL

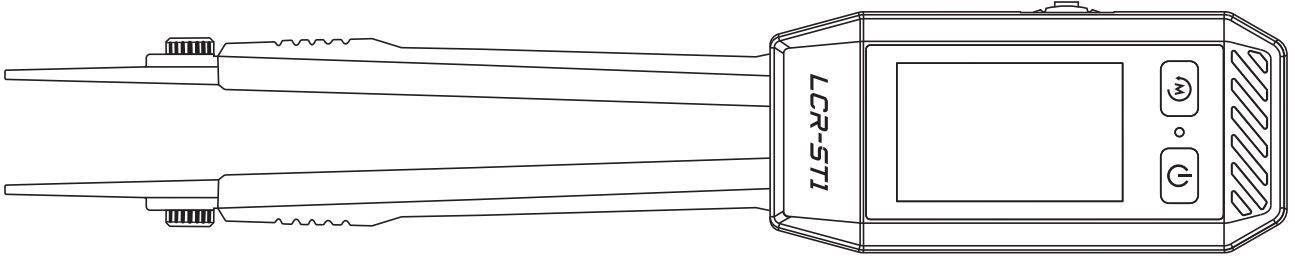

目 录

用户须知 ››› 01

一、产品简介 ››› 02

二、面板介绍 ››› 03

三、参数介绍 ››› 05

四、操作说明 ››› 07

五、固件升级 ››› 11

六、注意事项 ››› 12

七、生产信息 ››› 13

CATALOG

USER NOTICE ››› 14

1.PRODUCTS OVERVIEW ››› 15

2.PANEL INTRODUCTION ››› 16

3.PARAMETER INTRODUCTION ››› 18

4. OPERATION INSTRUCTIONS ››› 21

5.FIRMWARE UPGRADE ››› 26

6.PRECAUTIONS ››› 27

7.CONTACT US ››› 28

用户须知

●本手册详细介绍了产品的使用方法、注意事项以及相关事项，在使用产品之前，请详细阅 读手册，以便发挥产品的最佳性能。

●不要在易燃、易爆的环境中使用仪器。

●仪器更换的废旧电池和报废的仪器不可与生活垃圾一同处理请按国家或者当地的相关 法律规定处理。

●当仪器出现任何质量问题或者对使用仪器有疑问时，可联系“菲尼瑞斯-FNIRSI” 在线客服或厂家，我们将在第一时间为您解决。

一、产品简介

LCR-ST1是我司最新研发的镊子形LCR电桥，该产品是一款多功能、便携的测试仪器，支持电阻、电容、电感和二极管的精密测量。该产品采用先进的测量技术，确保高精度和高稳定性。其1.14英寸彩屏显示和磁吸功能增加了使用的便捷性，内置250mAh锂电池，提供持久的使用时间，并支持100Hz、1kHz、10kHz三种频率。独特的镊子形设计使其特别适合在狭小空间内进行精细操作，快速测试电子元器件。轻便便携的特性，使其成为现场工程师和实验室中不可或缺的高效工具。

二、面板介绍

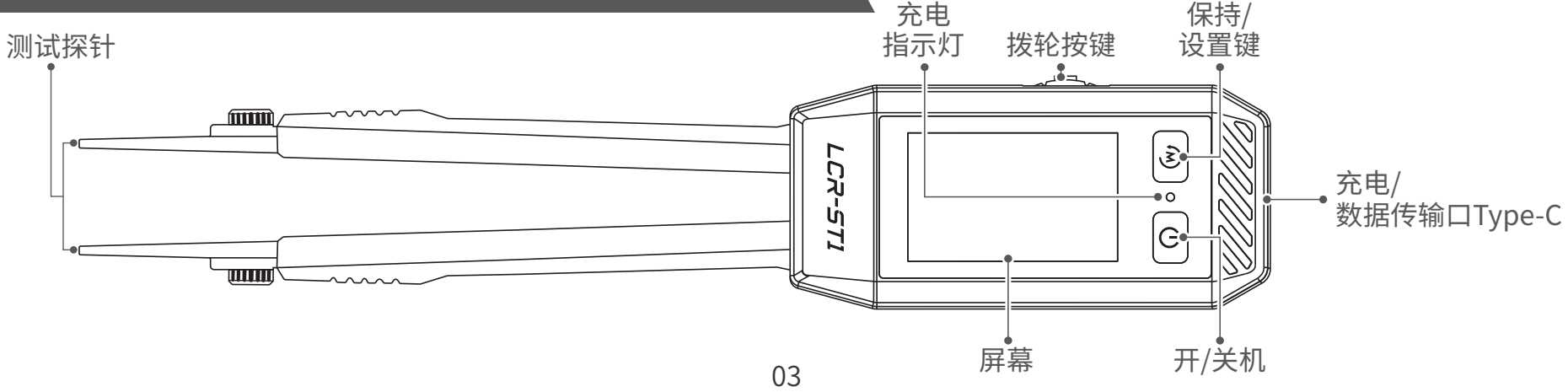

按键	操作	界面	功能	按键	操作	界面	功能
	短按	/	开机		短按	主界面	选择调整测试电平/频率
		主界面	清零			设置界面	确定/退出选择
	长按	/	关机		长按	/	切换副参数的DQZX值
	短按	主界面	保持数据		向左/向右拨动	主界面	左右调整数值
	长按	/	进入/退出设置			设置界面	上下选择选项

三、参数介绍

产品型号	LCR-ST1	屏幕	1.14寸	供电电压	250mAh可充电锂电池
充电规格	USBType-C，5V/1A	尺寸	28×19×150mm	重　　量	41g

类型	量程	100Hz	1KHz	10KHz
电容	1mF-22mF	5%±3字	5%±3字	- - -
	1uF-1mF	2%±3字	2%±3字	2%±3字
	1nF-1uF	2%±3字	0.5%±3字	0.5%±3字
	1pF-1nF	- - -	2%±3字	2%±3字

类型	量程	100Hz	1KHz	10KHz
电感	1H-10H	5%±3字	5%±3字	- - -
	1mH-1H	2%±3字	2%±3字	2%±3字
	10uH-1mH	2%±3字	0.5%±3字	0.5%±3字
	1uH-10uH	- - -	- - -	2%±3字
电阻	1MΩ-10MΩ	5%±3字	5%±3字	- - -
	1KΩ-1MΩ	1%±3字	0.5%±3字	1%±3字
	1Ω-1KΩ	1%±3字	0.5%±3字	0.5%±3字
	10mΩ-1Ω	2%±3字	2%±3字	2%±3字
二极管	导通电压小于0.7V			

四、操作说明

【4.1】界面介绍

①测试档位　②测试电平/频率　③电量　④测量参数

⑤数据保持　⑥单位　⑦测量副参数

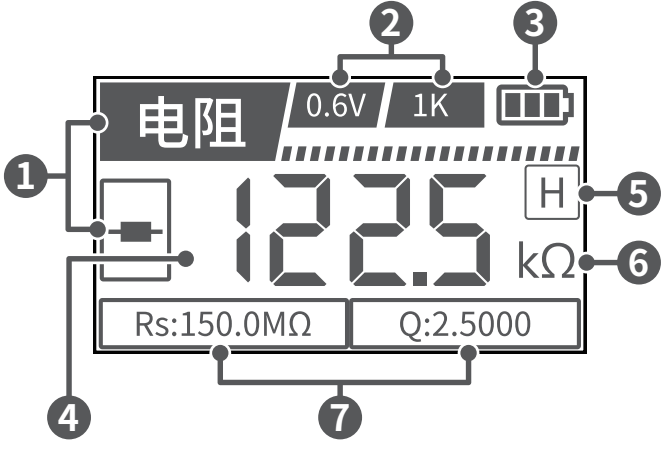

【4.2】测试探头安装说明

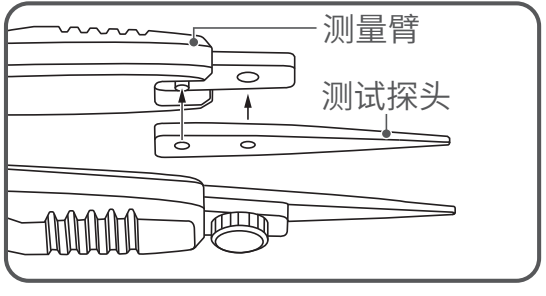

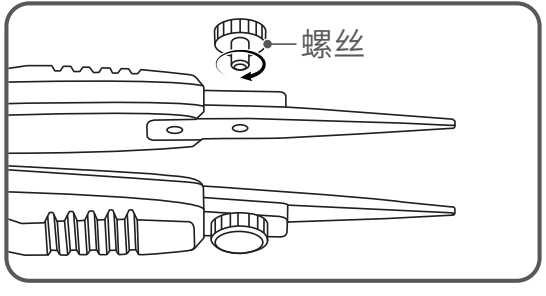

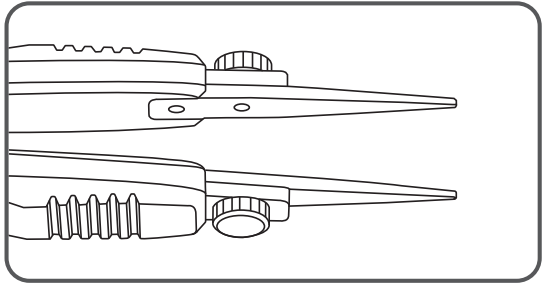

●将测试探头对齐孔位嵌入测量臂(测试探头带锯齿的面朝镊子的内侧)

※拆卸同理,测量臂不可拆卸。

●旋转螺丝安装拧紧

【4.3】操作简介

开关机: 短按 ⏻ 开机,长按 ⏻ 关机(开机后通过 左右拨动选择语言,短按 确定语言)

测试主参数选择: 通过 左右拨动进行自动、电阻、电容、电感、二极管测量参数切换

测试电平选择: 按下 切换电平区域,然后通过 左右拨动切换0.3V、0.6V测试电平

测试频率选择: 按下 切换频率区域,然后通过 左右拨动切换100Hz、1K、10K测试频率

※LCR使用交流测试信号施加在被测件(DUT)上进行阻抗测量,频率是交流信号源的主要参数之一,由于元件的非理想性和分布参数的存在,以及测试端和测试线分布参数的影响,同一元件使用不同的测试频率,可能会有不同的测量结果。

短路清零: 首先选择要清零的测试频率,在测试槽口插上短路片,如使用SMD测试钳或用测试夹的,用短路片短接测试端,短按 ⏻ 进入清零,仪器自动测量判别后执行相应短路清零。

数据保持: 短按 进行数据保持,此时界面显示图标 H ,数据保存的同时会自动数据保存到EXCLE表中,数据线接入电压即可在模拟U盘中读取

通断: 在二极管模式下,测量电阻小于50Q即可触发通断

设置页面: 长按 进入系统设置, 左右拨动切换一级菜单和二级菜单,按下 进入和退出二级菜单,系统设置包含以下内容:

设置项	功能	参数选项
系统语言	切换系统显示语言	中文、英文
音量设置	切换系统音量大小	0-5档调节
屏幕亮度	屏幕亮度调节	0-100进度条无极调光
自动关机	无操作自动关机	关闭/5/15/30分钟
恢复出厂设置	恢复到出厂的系统设置	所有设定的参数全清除
关于	查看系统信息	查看型号及版本号

五、固件升级

●在关机状态下依次长按拨轮按键和开关机键进入固件升级页面

●使用带有数据传输的数据线接入设备和电脑

●电脑将会自动出现弹窗文件夹，将固件拖入文件夹即可

●固件升级完成将会自动重启

六、注意事项

●测量确保镊子尖端与被测件接触良好，避免接触不良导致测量误差。

●请勿带电测量，防止仪器损坏。

●不建议在线测量，由于外部PCBA连接属性为止，在线测量值仅供参考，无精度保证。

●自动档不支持二极管测量，且自动测量出的元器件类型仅供参考，特殊情况下有可能出现误判。

●测量电容前需将电容放电，避免仪器损坏

七、生产信息

产品名称:LCR-ST1/智能电桥镊子

品牌/型号:FNIRSI/LCR-ST1

服务电话:0755-28020752

服务邮箱:support@fnirsi.com

商务邮箱:business@fnirsi.com

生产商:深圳市菲尼瑞斯科技有限公司

地址:广东省深圳市龙华区大浪街道伟华达工业园C栋西边8楼

网址:www.fnirsi.cn

执行标准:SJ/T 10298-1991

USER NOTICE

● This manual provides detailed instructions on product usage, precautions, and related matters. Before using the product, please read the manual carefully to ensure optimal performance of the product.

●Do not use the instrument in flammable or explosive environments.

●Waste batteries replaced by the instrument and scrapped instruments should not be disposed of together with household waste. Please dispose of them according to relevant national or local laws and regulations.

●If there are any quality issues with the instrument or if you have any questions about its use, please contact "FNIRSI" online customer service or the manufacturer. We will promptly assist you.

1.PRODUCTS OVERVIEW

LCR-ST1 is our latest developed tweezer-type LCR bridge. This product is a multifunctional and portable testing instrument that supports precise measurement of resistance, capacitance, inductance, and diodes. Utilizing advanced measurement technology, it ensures high accuracy and stability. Its 1.14-inch color screen display and magnetic suction feature enhance usability. With a built-in 250mAh lithium battery, it provides long-lasting usage time and supports three frequencies: 100Hz, 1kHz, and 10kHz. The unique tweezer-type design makes it particularly suitable for fine operations in narrow spaces, enabling quick testing of electronic components. Its lightweight and portable nature make it an indispensable and efficient tool for field engineers and laboratories.

2. PANEL INTRODUCTION

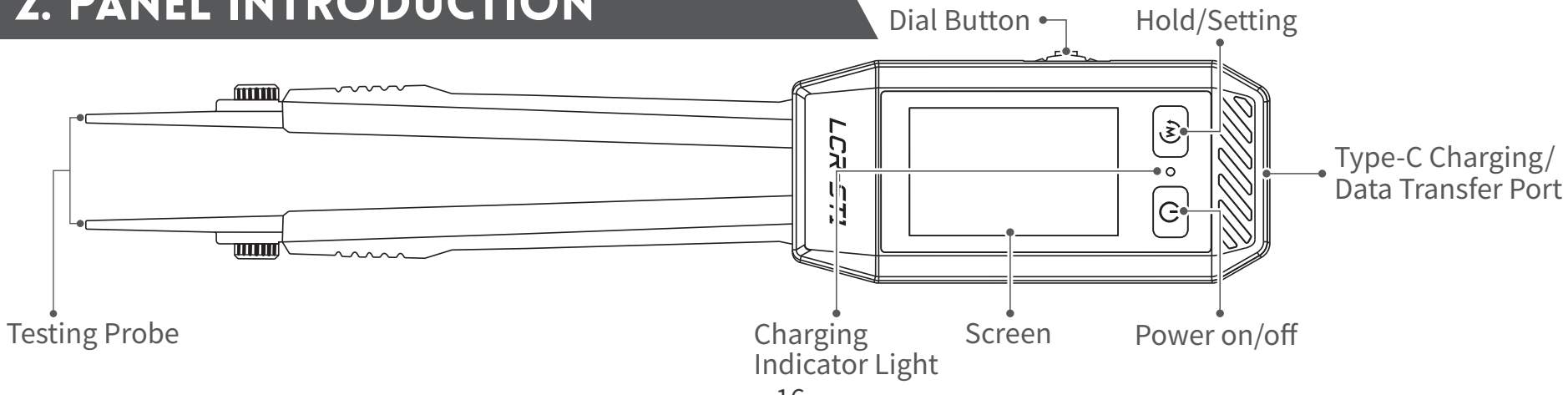

Button	Operation	Interface	Function	Button	Operation	Interface	Function
	Short Press	/	Power On		Short Press	Main Interface	Select to adjust test level/frequency
		Main Interface	Reset			Settings Interface	Confirm/exit selection
	Long Press	/	Power Off		Long Press	/	Switch DQZX of secondary parameters
	Short Press	Main Interface	Hold Data		Scroll left/right	Main Interface	Adjust numerical values left/right
	Long Press	/	Enter/exit Settings			Settings Interface	Select options up/down

3.PARAMETER INTRODUCTION

Product Model	LCR-ST1	**Screen**	1.14inch
Size	28×19×150mm	**Power Supply Voltage**	250mAh rechargeable lithium battery
Weight	41g	**Charging Specifications**	USBType-C, 5V/1A

Type	Range	100Hz	1KHz	10KHz
Capacitance	1mF-22mF	5%reading±3	5%reading±3	- - -
	1uF-1mF	2%reading±3	2%reading±3	2%reading±3
	1nF-1uF	2%reading±3	0.5%reading±3	0.5%reading±3
	1pF-1nF	- - -	2%reading±3	2%reading±3
Diode	Forward voltage drop less than 0.7V			

Type	Range	100Hz	1KHz	10KHz
Inductance	1H-10H	5%reading±3	5%reading±3	- - -
	1mH-1H	2%reading±3	2%reading±3	2%reading±3
	10uH-1mH	2%reading±3	0.5%reading±3	0.5%reading±3
	1uH-10uH	- - -	- - -	2%reading±3
Resistance	1MΩ-10MΩ	5%reading±3	5%reading±3	- - -
	1KΩ-1MΩ	1%reading±3	0.5%reading±3	1%reading±3
	1Ω-1KΩ	1%reading±3	0.5%reading±3	0.5%reading±3
	10mΩ-1Ω	2%reading±3	2%reading±3	2%reading±3

4. OPERATION INSTRUCTIONS

【4.1】Interface Introduction

①Test range ②Test voltage/frequency
③Battery level ④Measurement parameters
⑤Data hold ⑥Units
⑦Auxiliary measurement parameters

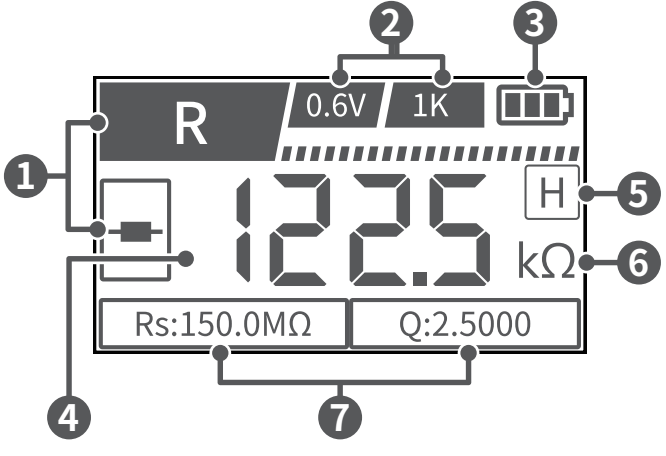

【4.2】Installation Instructions for Test Probe

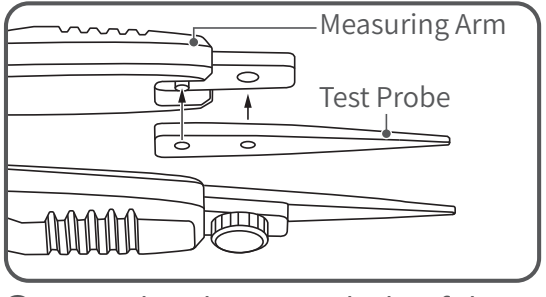

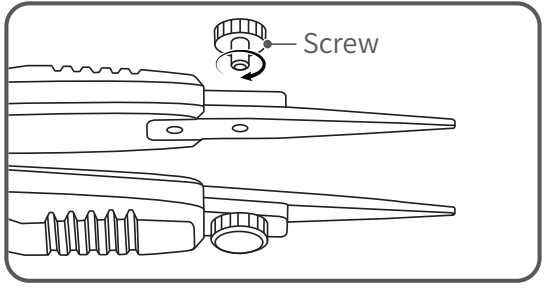

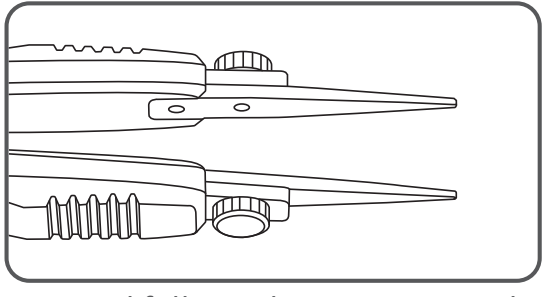

●Insert the alignment hole of the test probe into the measuring arm (ensure the serrated side of the test probe faces the inner side of the tweezers).
●Rotate the screw to tighten for installation.

※Removal follows the same principle; the measuring arm is not detachable.

【4.3】Operation Instructions

Power On/Off: Short press ⏻ Power on, long press ⏻ Power off. (Power on, select the language by sliding left or right, then press to selct the language)

Main Parameter Selection: Use the left and right dial buttons to automatically switch between resistance, capacitance, inductance, and diode measurement parameters.

Test Voltage Level Selection: Press the middle dial button to switch the voltage level area, then use the left and right dial buttons to switch between 0.3V and 0.6V test voltages.

Test Frequency Selection: Press the middle dial button to switch the frequency area, then use the left and right dial buttons to switch between 100Hz, 1kHz, and 10kHz test frequencies.

※ LCR meters use an AC test signal applied to the Device Under Test (DUT) for impedance measurement. Frequency is a primary parameter of the AC signal source. Due to component non-idealities, distributed parameters, and the influence of test leads and connections, the same component may yield different measurement results at different test frequencies.

Short Circuit Zeroing: First, select the test frequency that you want to zero. Insert a short-circuit piece into the test socket, whether using SMD test tweezers or clamps. Short-press ⏻ to enter zeroing mode. The instrument will automatically measure and execute the corresponding short circuit zeroing after identification.

Data Hold: Short press Ⓜ the data hold. At this time, the screen will display the [H] .Data is automatically saved to an Excel sheet while being stored,The data can be accessed from a simulated USB drive by connecting the voltage through the data cable.

Continuity: In diode mode, a resistance measurement of less than 50Ω triggers continuity.

Settings Page: Long press the button to enter system settings.Use the left and right dial buttons to switch between primary and secondary menus.Press the middle dial button to enter or exit the secondary menu.

The system settings include the following content:

Settings	Function	Parameter Options
Language	Switch system display language	Chinese, English
Volume	Adjust system volume	0-5 level adjustment
Backlight	Adjust screen brightness	0-100 progress bar infinite dimming
Auto Power Off	Automatic shutdown without operation	Off / 5 / 15 / 30 minutes
Restore	Restore to factory settings	Clear all set parameters
About	View system information	View model and version number

5.FIRMWARE UPGRADE

- Power off the device, then long press the dial button and power button to enter the firmware upgrade page.
- Connect the device to the computer using a data transfer cable.
- A file folder popup will appear on the computer automatically. Drag and drop the firmware file into the folder.
- Once the firmware upgrade is complete, the device will automatically restart.

6.PRECAUTIONS

- Ensure good contact between the tweezer tips and the device under test to avoid measurement errors due to poor contact.
- Do not measure under live conditions to prevent damage to the instrument.
- It is not recommended for online measurements. Due to the characteristics of external PCBA connections, online measurement values are for reference only and do not guarantee accuracy.
- The automatic does not support diode measurement and automatically detected component type is for reference only and may lead to misjudgment under special circumstances.
- Discharge the capacitor before measuring to avoid damaging the instrument

7.CONTACT US

Any FNlRSl's users with any questions who comes to contact us will have our promise to get a satisfactory solution +an extra 6 months warranty to thanks for your support!
By the way, we have created an interesting community, welcome to contact FNiRSl staff to join our community.

Shenzhen FNIRSI Technology Co., LTD.
Add.: West of Building C , Weida Industrial Park , Dalang Street , Longhua District , Shenzhen , Guangdong , China
Tel: 0755-28020752
Web:www.fnirsi.cn
E-mail:business@fnirsi.com (Business)
E-mail:service@fnirsi.com(Equipment Service)

下载用户手册&应用软件

Download User manual&APP&Software

www.fnirsi.cn